

hunterstoves GROUP

HERALD

HERALD 4 ECO
HERALD 5 ECO
HERALD 5 ECO SLIMLINE
HERALD 8 ECO
HERALD 14 Eco

SINGLE AND DOUBLE DOOR MODELS

JINHHE RevH
/2023

ECO DESIGN 2022 APPROVED

HUNTERSTOVES.CO.UK

SIA ecodesign ready

Welcome to the Hunter Stoves family and thank you for purchasing a Herald stove. This stove was designed and built to be a high-performance heating appliance, and we hope it will bring you great enjoyment. The natural environment is important to us, so our stoves are manufactured to provided you with a clean and efficient burn that will keep you warm through cold winter nights.

Contents

STOVE DIMENSIONS	1
GENERAL INFORMATION	2
MATERIAL CLEARANCES	4
GENERAL GUIDANCE	5
OPERATING INSTRUCTIONS	9
MAINTENANCE AND SERVICING	11
IMPORTANT INFORMATION	13
TROUBLESHOOTING	15
PRODUCT FICHE - SINGLE DOOR	16
TECHNICAL INFORMATION - SINGLE DOOR	17
PRODUCT FICHE - DOUBLE DOOR	18
TECHNICAL INFORMATION - DOUBLE DOOR	19
WARRANTY	20

STOVE DIMENSIONS

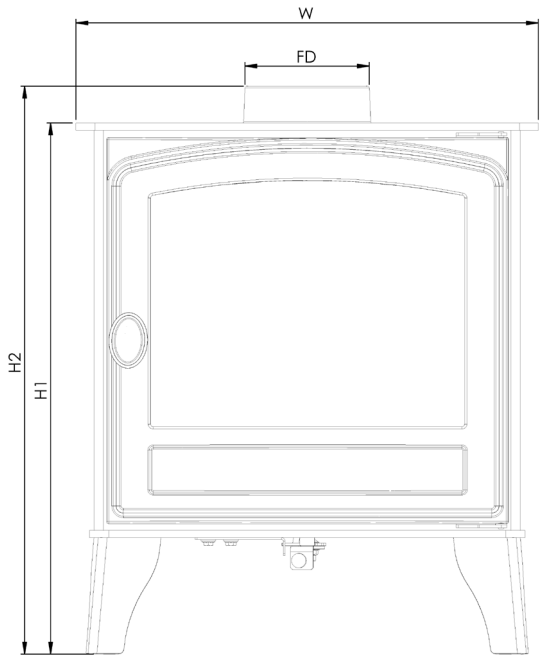

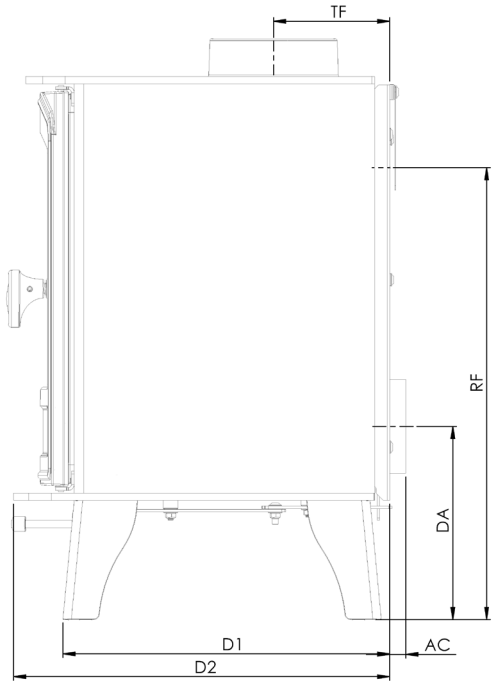

DIMENSIONS	H1	H2	W	FD	TF	RF	DA	AC	D1	D2
Herald 4 Eco	557mm	600mm	470mm	125mm	127mm	458mm	205mm	18mm	283mm	353mm
Herald 5 Eco	591mm	634mm	514mm	125mm	127mm	492mm	210mm	18mm	356mm	410mm
Herald 5 Eco Slimline	568mm	611mm	575mm	125mm	127mm	469mm	210mm	18mm	284mm	357mm
Herald 8 Eco	621mm	664m	636mm	125mm	127mm	522mm	235mm	18mm	365mm	433mm
Herald 14 Eco	694mm	735mm	712mm	125mm	127mm	590mm	263mm	13mm	438mm	517mm

Single and double door models (where available) share the same nominal dimensions. See Technical Information sheets for model availability.

GENERAL INFORMATION

Stove Model	Herald 4 Eco	Herald 5 Eco	Herald 5 Eco Slimline	Herald 8 Eco	Herald 14 Eco
Nominal Heat Output	4.9kW	5.0kW	4.9kW	7.0kW	8.1kW
Efficiency	75%	78%	76%	75%	75%
CO (@13% O_2)	0.08%	0.09%	0.09%	0.09%	0.072%
Mean Flue Temperature	285°C	250°C	292°C	286°C	300°C
Temperature in Flue Spigot	342°C	300°C	350°C	343°C	360°C
Min. Draft	12Pa	12Pa	12Pa	12Pa	11Pa
Flue Gas Mass Flow Rate	5.4g/s	5.1g/s	4.8g/s	7.3g/s	8.1g/s
Weight	77kg	96kg	92kg	123kg	170kg

See Technical Information sheets for full details of both single and double door models.

Meets the requirements of:
- **BS EN 13240:2001 + A2:2004**
- **DEFRA (Smoke Control Areas UK)**



The appliance will become very hot when used in accordance with the instructions. The supplied operating tool or glove may be used to open the door and operate the air controls. We also recommend use of a fire-guard in the presence of children, the elderly or the infirm. The fire-guard should be manufactured in accordance with BS8423.

Legal Requirements

These instructions cover the basic principles to ensure satisfactory installation of the stove, although details may need slight modification to suit particular local site conditions.

In all cases the installation must comply with current Building Regulations, Local Authority Byelaws, European and National Standards and other specifications or regulations as they affect the installation of the stove.

It should be noted that the Building Regulations requirements may be met by adopting the relevant recommendations given in British Standards BS 8303 and BS EN 15287 as an alternative means to achieve an equivalent level of performance to that obtained following the guidance given in Approved Document J.

Single Door and Double Door Models

Single door and double door models of each size of stove are identical with regards to their internal dimensions and performances. Differences are limited to the doors themsleves and relevant fittings.

Competent Persons Scheme

Hunter Stoves Group recommend that this stove be installed by a member of an accredited competent persons scheme e.g. HETAS.

If the installer is not a member of a competent person's scheme, it is a legal requirement, in the UK, to notify your Local Building Control Officer in advance of any installation work starting.

Hearth

Hearth constructions must comply with the current building regulations.

Your stove must be installed on a floor with adequate load-bearing capacity. If the existing construction does not meet this pre-requisite, suitable measures (e.g. load distributing plate) should be put in place.

The stove should stand wholly above a solid, non-combustible hearth, at least 125 mm thick (this may include the thickness of a solid floor).

A hearth surface free of combustible material should extend at least 225mm from the front of the appliance (as per Building Regulations), although we may recommend more where possible to cover the swing of the door.

Please refer to Building Regulations Approved Document J for further information.

Air Supply

Assuming an air permeability rating greater than 5m³/hour/m²:

Herald 4 Eco, 5 Eco, 5 Eco Slimline
The room or space containing this appliance does not need a permanent, unobstructed air opening.

Herald 8 Eco
A permanently open vent of 1100mm² is required.

Herald 14 Eco
A permanently open vent of 1750mm² is required.

Due consideration should be given to air requirements for any other appliance in the same room or space. Additionally any air opening must be kept clear from blockage or obstruction.

New Builds

Attention is needed in new built properties where the design air permeability is less than 5m³/hour/m² at 50 Pa. Approved Document J and Appendix F gives further information. A window opening is not appropriate.

Carbon Monoxide (CO) Alarms

In compliance with Building Regulations, a carbon monoxide (CO) alarm must be installed in the room where the stove is located. (See page 14 for additional details.)

The use of such an alarm is not considered a substitute for regular maintenance or servicing of the appliance and flue system.

Clearance to Combustibles

For clearance to combustible materials, refer to table on page 4.

Clearance to combustible materials are stated in accordance with BS EN 13240, where a combustible surface at the stated distance will be less than 65°C above ambient room temperature (under test conditions). This applies in all directions, e.g. towards walls and towards the hearth.

Clearance to Non-Combustibles

For clearance to non-combustible materials, refer to Building Regulations Approved Document J.

Additionally, Hunter Stoves suggests a gap of 75mm around the stove if possible. This provides space for convection around the appliance, improving heat transfer to the room.

Certificate of Compliance

After completion of the appliance installation please ensure the form below (specimen) is completed by your installer to comply with the requirements of HETAS and building regulations. The installer must supply these details, including registration number for any insurance details that may need changing after installation of the appliance.

Connection to the Chimney

An existing fireplace opening can be bricked up or sealed with a register plate. A short length of flue pipe of minimum 125mm internal diameter may then be used to connect the stove to the chimney. This flue pipe should be made of 316 grade stainless steel or vitreous enamelled steel, nominal thickness 1.2mm. Ensure that the pipe end is no closer than 76mm to the chimney walls. The length of any horizontal run of flue pipe must not exceed 125mm. It is essential that all connections between the stove and chimney-flue are sealed and made airtight. Any bend in the chimney or connected flue pipe should not exceed 45° to the vertical, and 90° bends should not be used.

Ensure any existing chimneys are clear of obstruction and have been swept prior to installation. If the stove is being fitted into a previous open fireplace then the chimney must be swept one month after fitting.

Make provision to access the chimney/flue system for cleaning and the removal of debris. If there is no existing chimney then either a prefabricated block chimney in accordance with Building Regulations Approved Document J, or a twin-walled insulated stainless-steel flue to BS EN 1856 can be used. These chimneys must be fitted in accordance with the manufacturer's instructions and Building Regulations. New masonry and flue block chimneys must meet the requirements of Building Regulations Document J. Any connecting flue pipe systems must also meet these regulations.

Please check the suitability of the fireplace and/or surround for use with this appliance before installing it. If you have any doubts about the suitability of your chimney, consult your local Dealer/Stockist or Installation Engineer.



HETAS LTD - CERTIFICATE OF COMPLIANCE

PLEASE TICK APPROPRIATE BOXES OR ENTER DETAILS IN BOXES BELOW

HETAS

Record ID (HETAS Use Only) ("Indicates that this data must be given)

Customer Name *
Installation Address *
Installation Address
Installation Address
Installation Address
Town *
Postcode * Work Completion Date *
Local Authority Name (*Must be given if no postcode available)
Installing Company Name * Company's HETAS Reg. No. *
Installing Engineer's Name * Engineer's HETAS Reg. No. *

Description of Work

Location: Lounge Dining Room Kitchen Utility Room Bedroom Other, Specify

Appliance: Dry Open Fire Open Fire with Boiler Dry Cooker Cooker with Boiler Dry Roomheater/Stove Roomheater/Stove with Boiler Independent Boiler
Make Model Heat Output kW

System: New Heating and Hot Water System Updated Existing Heating and Hot Water System Dry System Only

If Wet System: Is the Hot Water System Unvented? Y / N

Chimney: New Insulated Factory Made Chimney System Installed

Relining of existing chimney: Twin Wall Flexible Liner (for Class 1 Appliance) Cast In-situ Liner Rigid Sectional Liner Metal Rigid Sectional Liner Other

Hearth: New Hearth/Surround fitted Existing Hearth Surround Updated

Additional Information

Connecting fluepipe: Diameter mm Socket joints upward and gas tight

Provision for sweeping chimney/flueppipe: Yes No Chimney Data Plate Location *

Air supply: Has a permanently open air vent been fitted: Yes No

Is vent opening at least 50% of cross sectional area of throat/flue or State total free area of air vent mm²

Confirm an approved Carbon Monoxide alarm has been fitted

Testing & Commissioning to Approved J Appendix E

Confirm you have commissioned and tested the appliance & associated work for safe and efficient operation

Declaration of completion: As the competent person responsible for the work described above, I confirm that the appliance and associated work has been installed in accordance with the HETAS rules of registration, and that the work complies with Regulations 4 and 7 of the Building Regulations, and Approved Documents J, G & L as applicable.

Signed Print name: Date:

COPIES OF THIS COMPLETED CERTIFICATE MUST BE (WHITE COPY) SENT TO HETAS LTD AT THE ADDRESS GIVEN BELOW (PINK COPY) GIVEN TO THE CUSTOMER FOR RETENTION (YELLOW COPY) RETAINED BY THE INSTALLING COMPANY

THIS CERTIFICATE SHOULD BE RETAINED BY THE PROPERTY OWNER WHO MAY BE REQUIRED TO PRODUCE IT IN ANY FUTURE SALE OF THE PROPERTY.

HETAS Ltd, PO Box 37, Bishops Cleeve, Glos. GL52 0TB HETAS Ltd © (Oct 2010)

SPECIMEN

MATERIAL CLEARANCES

Combustible Distances

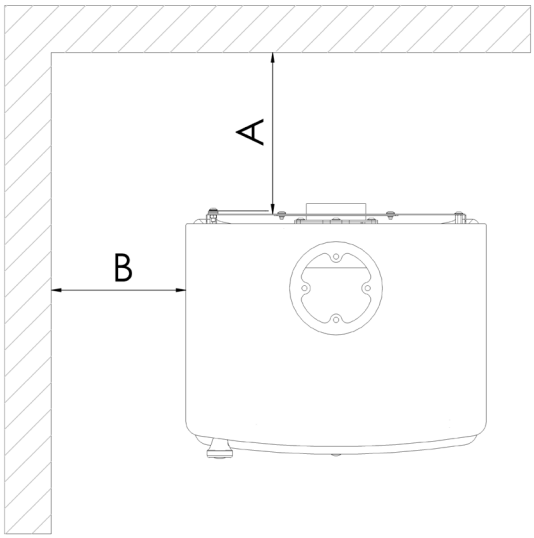

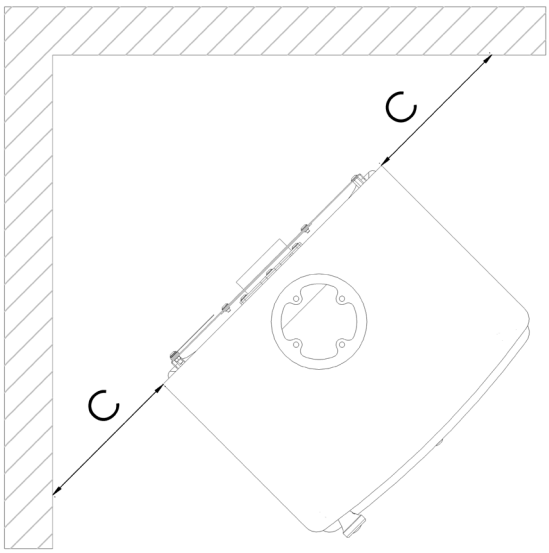

Hearth Requirements

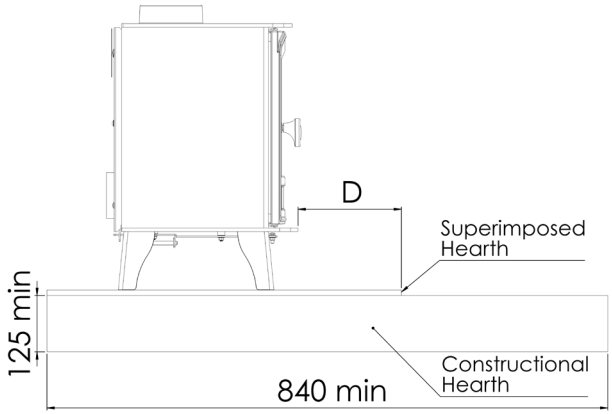

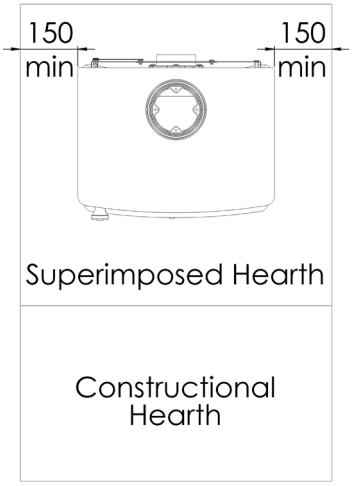

Model	A (to Twin-Walled Flue)	B Combustible	C Combustible	D Superimposed Hearth	Front to Furniture
Herald 4 Eco	300mm	500mm	350mm	225mm*	1250mm
Herald 5 Eco	300mm	500mm	350mm	225mm*	1250mm
Herald 5 Eco Slimline	200mm	450mm	200mm	225mm*	1150mm
Herald 8 Eco	175mm	450mm	200mm	225mm*	1150mm
Herald 14 Eco	150mm	550mm	550mm	225mm*	1200mm

* A superimposed hearth depth of 300mm or the width of the door (whichever is greater) is recommended where possible.
For clearance distances to single skin flue pipe, please refer to Building Regulations (Approved Document J).

GENERAL GUIDANCE

Unpacking and Removing Internal Components

After unpacking all internal components must be removed prior to fitting the stove. This will make handling the stove easier; allow access to fixings and the flue outlet; as well as protect the internal components from damage during the installation process.

1. Box
2. Instructions
3. Flue Collar with Fixings
4. Gauntlet (pair)
5. Log Retainer
6. Grate
7. All bricks (see page 13 for removal)

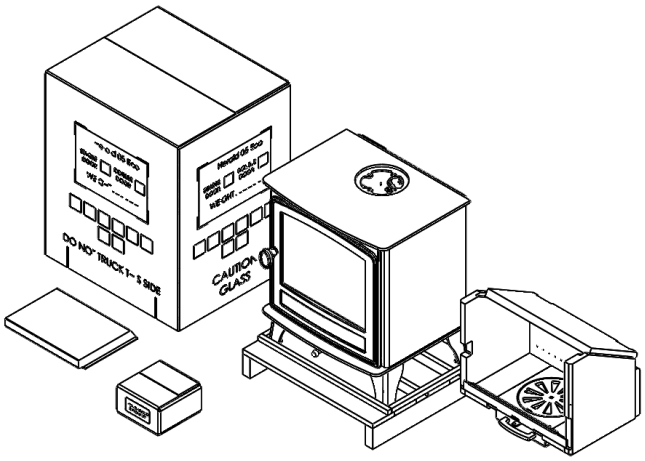

Flue Collar/Blanking Plate

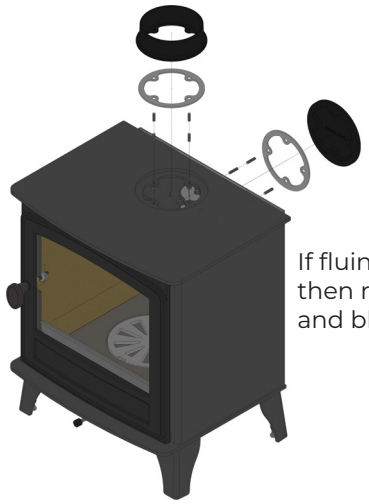

If fluing from the rear then reverse collar and blanking plate.

Data Plate

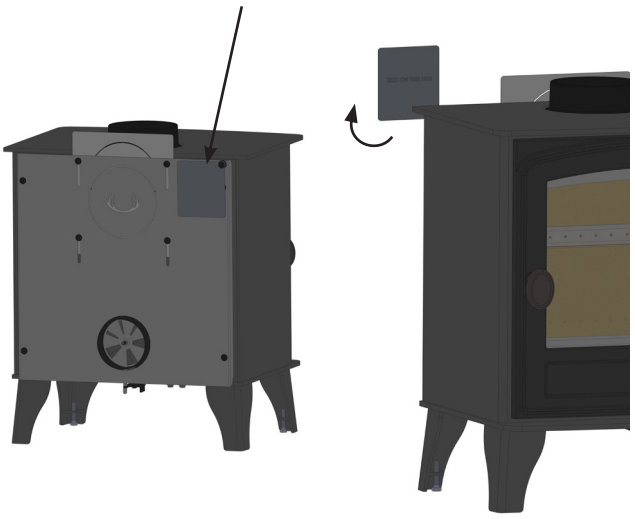

Direct Air

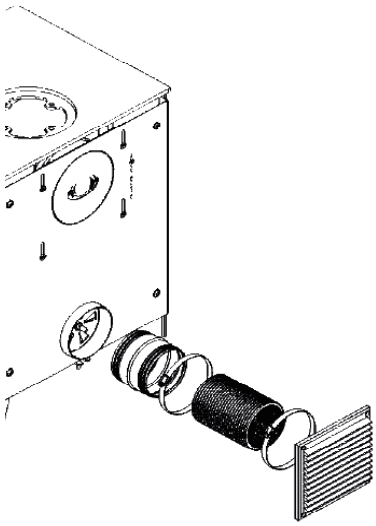

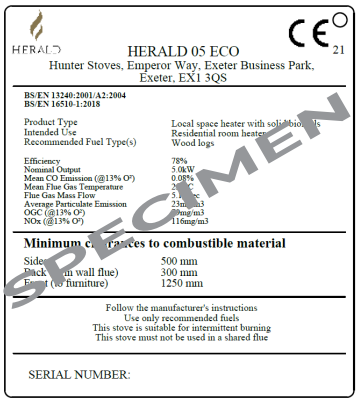

HERALD

HERALD 05 ECO

CE 21

Hunter Stoves, Emperor Way, Exeter Business Park, Exeter, EX1 3QS

BS/EN 13240:2001/A2:2004
BS/EN 16510-1:2018

Product Type	Local space heater with solid biomass
Intended Use	Residential room heater
Recommended Fuel Type(s)	Wood logs
Efficiency	78%
Nominal Output	5.0kW
Mean CO Emission (@13% O²)	0.08%
Mean Flue Gas Temperature	2[illegible]
Flue Gas Mass Flow	5.[illegible]
Average Particulate Emission	23[illegible]m3
OGC (@13% O²)	[illegible]mg/m3
NOx (@13% O²)	116mg/m3

Minimum clearances to combustible material

Sides	500 mm
Back (to wall flue)	300 mm
Front (to furniture)	1250 mm

Follow the manufacturer's instructions
Use only recommended fuels
This stove is suitable for intermittent burning
This stove must not be used in a shared flue

SERIAL NUMBER:

SPECIMEN

Heat Shield

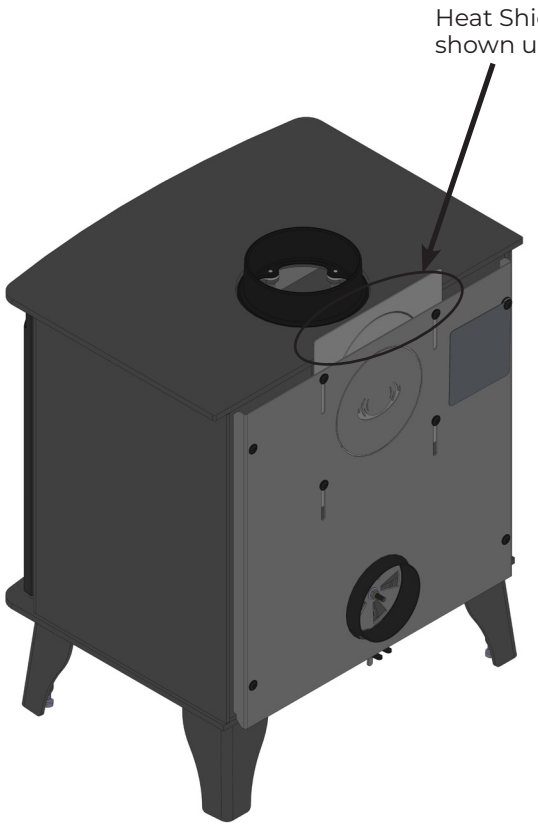

For top flue installation ensure heatshield plate is in the correct position (as shown in above drawing).

Smoke Control Stop

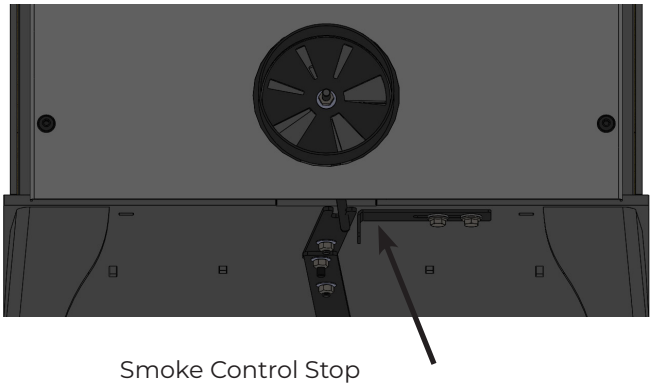

If you are in a Smoke Control Area then the plate needs to be set fully across to the left.

Baffles

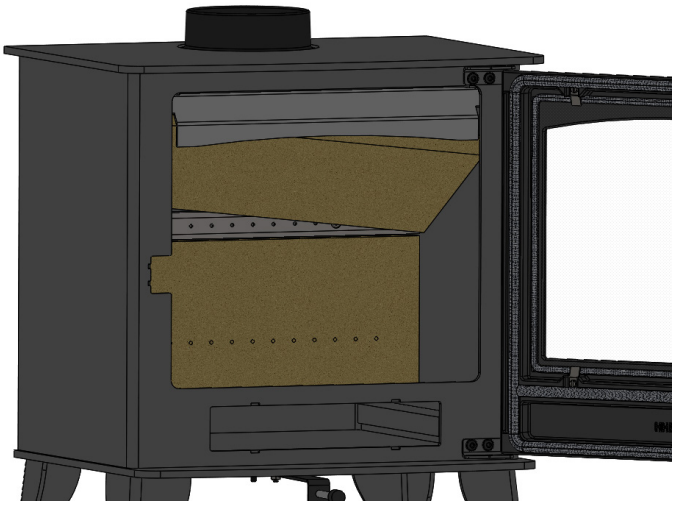

Remove grate and base bricks, then a side brick, then baffle brick (see page 12 for details).

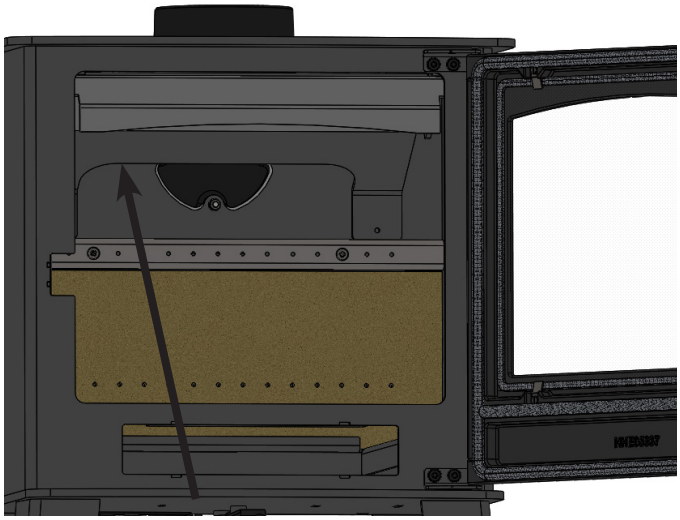

Baffle plate as shown above.

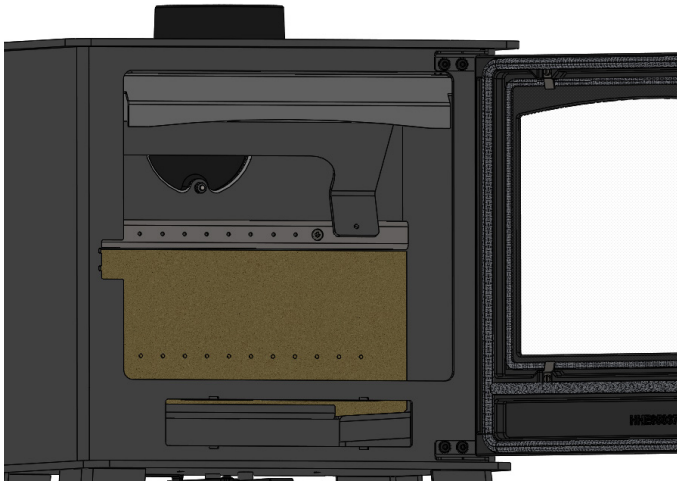

Slide the baffle plate forward so it is clear of the secondary bar and pull down into firebox and remove.



The Clean Air Act 1993 and Smoke Control Areas

Under the Clean Air Act local authorities may declare the whole or part of the district of the authority to be a smoke control area. It is an offence to emit smoke from a chimney of a building, from a furnace or from any fixed boiler if located in a designated smoke control area. It is also an offence to acquire an “unauthorised fuel” for use within a smoke control area unless it is used in an “exempt” appliance (“exempted” from the controls which generally apply in the smoke control area).

In England appliances are exempted by publication on a list by the Secretary of State in accordance with changes made to sections 20 and 21 of the Clean Air Act 1993 by section 15 of the Deregulation Act 2015. In Scotland appliances are exempted by publication on a list by Scottish Ministers under section 50 of the Regulatory Reform (Scotland) Act 2014. Similarly, In Northern Ireland appliances are exempted by publication on a list by the Department of Agriculture, Environment and Rural Affairs under Section 16 of the Environmental Better regulation Act (Northern Ireland) 2016. In Wales appliances are exempted by regulations made by Welsh Ministers.

Further information on the requirements of the Clean Air Act can be found here:
https://www.gov.uk/smoke-control-area-rules

Your local authority is responsible for implementing the Clean Air Act 1993 including designation and supervision of smoke control areas and you can contact them for details of Clean Air Act requirements.

The following stoves have been recommended for use in smoke control areas when burning wood logs:

- Herald 4 Eco Single Door
- Herald 5 Eco Single Door
- Herald 5 Eco Slimline Single Door
- Herald 8 Eco Single Door
- Herald 5 Eco Double Door
- Herald 5 Eco Slimline Double Door
- Herald 8 Eco Double Door
- Herald 14 Eco Double Door

Each stove must be fitted with a permanent stop provided by the Hunter Stoves to prevent full closure of the air controls. In a smoke control area, the air control stop must be fitted. If this is removed, then the stove will no longer be exempt and therefore no longer suitable for burning unauthorised fuels in a smoke control area.

Refuelling on to a low fire bed

If there is insufficient burning material in the firebed to light a new fuel charge, excessive smoke emission can occur. Refuelling must be carried out onto a sufficient quantity of glowing embers and ash that the new fuel charge will ignite in a reasonable period. If there are too few embers in the fire bed, add suitable kindling to prevent excessive smoke.

Fuel overloading

The maximum amount of fuel specified in this manual should not be exceeded, overloading can cause excess smoke.

Operation with door left open

Operation with the door open can cause excess smoke. The appliance must not be operated with the appliance door left open except as directed in the instructions.

Dampers left open

Operation with the air controls or appliance dampers open can cause excess smoke. The appliance must not be operated with air controls, appliance dampers or door left open except as directed in the instructions.

Health and Safety Guidance
Special care must be taken when installing the stove such that the requirements of the Health and Safety at Work Act are met.

Handling
This appliance is very heavy. Adequate facilities must be available for loading, unloading and side handling.

Fire Cement
Some types of fire cement are caustic and should not be allowed to come into contact with the skin. In case of contact, wash immediately with plenty of water.

Asbestos
This stove contains no asbestos. If there is any possibility of disturbing any asbestos in the course of installation, then please seek specialist guidance and use appropriate protective equipment.

Metal Parts
When installing or servicing this stove, care should be taken to avoid the possibility of personal injury.

Stove Performance
This is a Domestic Appliance and must only be used in accordance with these instructions.

Grate
This stove is designed to be used with wood logs only. The grate is a cleaning device and should remain in a closed position whilst the stove is alight.

Important Warning
This stove must not be installed into a chimney that serves any other heating appliance.

Fitting a stove in a room which also contains an extractor fan and/or cooker hood should be avoided where possible. If this is unavoidable, the suitability of the space for fitting this appliance must be decided at the discretion of a qualified installer, and a flue draught interference test must be performed.

Operating With The Doors Open
The stove is tested as a closed door appliance and as such should not be operated with the doors open (except for fuel re-loading etc.)

TRIPLEBURN TECHNOLOGY

Our unique Tripleburn technology utilises three streams of air - Primary, Secondary and Tertiary - to provide optimum air flow to the firebox, aiding combustion and ensuring maximum efficiency throughout. This draws air over the fuel, across the door and behind the fuel. This means a faster light up and a fuller burn of the fuel.

Airwash Technology allows air to flow over the glass and across the fuel to ensure that the glass is always kept clean - guaranteeing an excellent view of your fire as it burns.

THE ENVIRONMENT (FRIENDLY FIRING)

To ensure a more environmentally friendly way of burning your stove, avoid turning it down to the point where you cannot see any visible flames. If the stove is run this way then the gases produced from the wood will not be burnt off (due to low temperatures in the chamber). This can also cause soot to condense in the flue system and could lead to a chimney fire. The smoke that is left as it exits the chimney will also pollute the surroundings and cause an unpleasant smell.

Remember that your chimney (however good) will not perform well if the stove is not used correctly.

OPERATING INSTRUCTIONS

Stove Body

Safety Advice

The stove paint curing process takes place at room temperature and the surface coating is virtually free from fumes and odours. When being put into operation for the first time we would recommend that windows and doors are opened for a short time to provide ventilation.

Air Controls

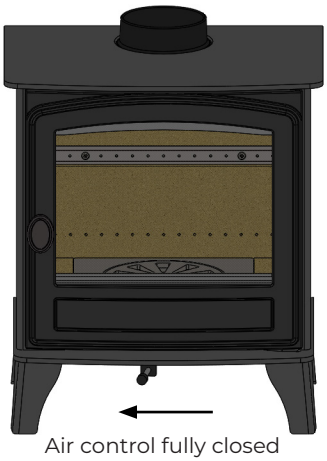

Air control fully closed

When the air control rod is pushed to the left then both the Primary and Secondary air intakes are in the closed position.

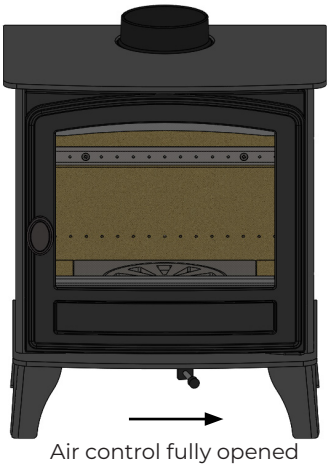

Air control fully opened

For the air valve to be in the fully open position push the air control to the right. This is necessary for lighting the stove.

Lighting the Stove

Hunter Stoves recommends the top down lighting method for a cleaner and more convenient start.

1. Ensure the air control is in the fully open position, and the internal grate is fully closed.
2. In the base of the stove, place 2 or 3 larger split and dry logs. Ensure a gap is left between the logs as this allows air movement to help the fire breathe when lit.
3. Place 2 smaller logs on top at 90° to the bottom logs.
4. Layer approximately six to eight pieces of kindling (finely chopped wood) on top of the logs in a crisscross pattern.
5. Place 1 or 2 eco fire lighters on top of the kindling in the centre.
6. Finally, place 2 to 4 thin pieces of kindling on top of the eco fire lighters.
7. Close the door as soon as flames appear.
8. A small amount of soot may appear on the glass during the lighting. This is perfectly normal and will go after a period of time.
9. Extra logs should not be added until the logs have burnt down into a bed of glowing embers.

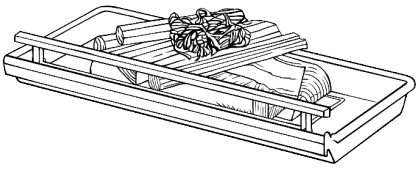

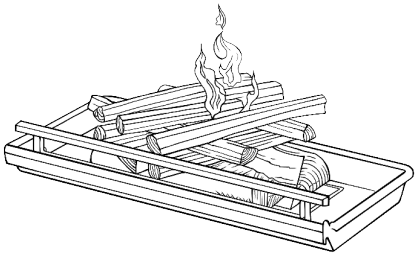

Kindling:

Length - 15cm to 20cm
Diameter - 1cm to 3cm
Approximately 8-12 finely chopped pieces

Kindling is required to bridge the gap between firelighters and logs, creating the initial heat required for clean combustion. A lack of kindling may cause the fire to smoulder or potentially go out.

Adding Wood

1. Only refuel when fire has died down to embers. Ensure that the wood you are using has a moisture content of less than 20% (we recommend 12-15% to ensure an efficient burn).
2. When refuelling open all the air controls fully and the damper (if fitted).
3. Open the door slowly by releasing the handle and allowing to stay like this for 5 to 10 seconds. Opening the door too fast will cause smoke to be drawn into the room as the firebox has not had time for the pressure to equalise. The smoke will then take the easiest route which is out through the opening.
4. Fully open the door slowly and break apart the remaining char, distributing it across the base of the firebox.
5. Carefully place the logs in. It is recommended you use 2 to 3 pieces of wood, placed parallel with each other and the stove glass. Please do not load the wood any higher than the top of the rear vermiculite brick (~160mm).
6. Close the door. (All our stoves are tested as closed door appliances and should be used as such.)
7. Keep the air control in the fully open position until the logs catch fire.
8. After a few minutes once the flames are fully established, slowly close the air control for a more efficient burn.

Wood Weights

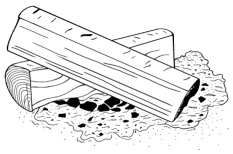

For a 5kW stove, we recommend approximately 1.1-1.4kg of wood.
For a 8kW stove, we recommend approximatley 1.6-2.0kg of wood.
Please note the the exact amount of wood to use is dependent on the species of wood, the moisture content, and the desired burn duration.

Maximum Fill Line

Do not fill the firebox with wood above the tertiary holes in the stainless steel bar (A) at the back of the firebox .

Herald 8 Eco
The maximum fill line is 125mm above the firebox base, indicated by the line on the side bricks (B).

Herald 14 Eco
The maximum fill line is 150mm above the firebox base, indicated by the line on the side bricks (B).

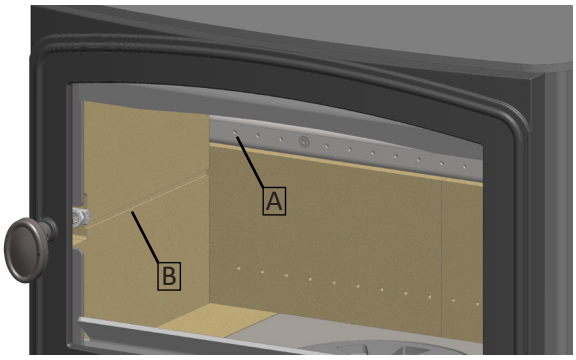

IMPORTANT!

Ensure the wood has a moisture content of less than 20% (we advise 12-15% for a more efficient burn) to allow the fuel to catch quickly. If the fuel has a higher moisture content then you are burning the water off and this will reduce the heat output and take longer to burn correctly. This can also cause a build up of soot and tar which could lead to a chimney fire. It will also cause the glass of the stove to blacken.

Refuelling must be carried out with a sufficient quantity of glowing embers and ash, so that the new fuel charge can ignite quickly. If there are too few embers, add some kindling to prevent excessive smoke. After refuelling leave the air control fully open for one minute before reducing to the desired setting.

Guide to Wood

Hardwood is a denser fuel than softwood and provides a higher heat content. Softwood produces 50% less heat content than hardwood. Softwoods are more prone to spitting and popping as they have pockets of moisture and sap contained within them (this can be reduced by seasoning and drying correctly).

Woods suitable for closed appliances - Ash, Beech, Birch, Blackthorn, Elm, Eucalyptus, Hawthorn, Hazel, Hornbeam, Maple, Oak, Rowan, Sycamore, Wild Cherry, Willow, Alder, Apple, Pear and Holly. (Oak, beech and birch burn at the highest rate when seasoned correctly).

These woods are also suitable but can crackle and spit - Cedar, Douglas Fir, Horse Chestnut, Larch, Plane, Sweet Chestnut and Willow.

WARNING!

Burning wet or unseasoned wood will create excess smoke emissions, tar deposits in the stove and chimney, and will not produce a satisfactory heat output.

DO NOT BURN BITUMINOUS COAL, PETRO-COKE, OTHER PETROLEUM BASED FUELS OR TREATED WOOD SUCH AS PALLETS. THIS WILL INVALIDATE THE PRODUCT WARRANTY. HOUSEHOLD WASTE MUST NOT BE BURNT ON THIS APPLIANCE.

OVER-FIRING
Using an excess amount of wood and/or leaving the air intake open can cause the stove to over-fire. This can cause damage to both the stove and the surrounding walls.

MAINTENANCE AND SERVICING

Periods Of Prolonged Non-Use

If the stove is to be left unused for a prolonged period, then it should be given a thorough clean to remove ash and unburned fuel residues. To enable a good flow of air through the appliance to reduce condensation and subsequent damage, leave the air controls fully open. If the appliance has been unused for a long period, such as during the spring and summer months, a competent person should check the chimney for potential obstructions before lighting the stove e.g. Have the chimney swept before the start of the heating season.

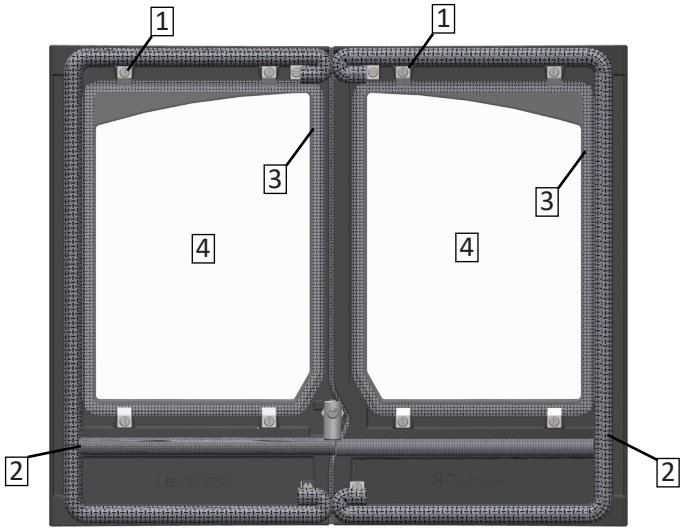

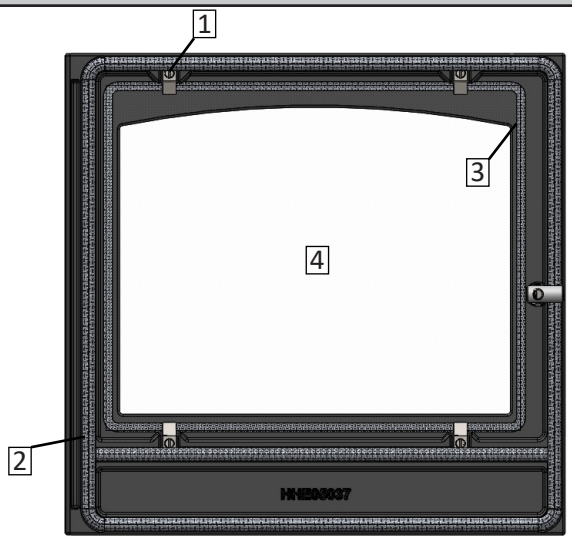

Glass Pane

To replace the glass unscrew the four screws that hold in the glass clips carefully and then remove.

To replace a glass panel please ensure you purchase new Glass Fibre Tape (3) at the same time. The clips and screws should only be finger tight to allow for the expansion and contraction of the glass.

Printed glass (4) should not be cleaned using cleaners high in alkaline or acidic content. Clean the glass panel when cool with a propriety glass cleaner by applying the cleaner to a cloth. Do not apply directly to the glass as this could cause run of which could soak into the rope seals (2 and 3) around the edge of the glass.

Highly abrasive substances should be avoided as these can scratch the glass and make subsequent cleaning more difficult. Wet logs on heated glass, a badly aimed poker or heavy slamming of the doors could crack the glass panels, the glass will not fracture from heat.

Please check periodically that the glass clips and screws (1) have not become loose.

Gasket Tape

The glass gasket tape (3) will have to be replaced when a new piece of glass (4) is fitted as the self-adhesive tape is stuck onto the glass.

Over time you may also find that the gasket tape changes colour. This is due to a reduction in the pigment used in the manufacture of the product and no cause for concern.

Rope

Check the rope (2) around the door. If rope is becoming detached, use rope glue to reattach. If the rope is in poor condition, a replacement rope kit may be ordered from the Hunter Stoves Group spares range.

It is recommended to test the seal between rope and stove body both before and after the rope glue has set.

Handle Adjustment

The handle can be adjusted by removing the grub screw (A) in the door catch, then loosening the nut (B) and turning the door catch (C) clockwise or anti-clockwise. Re-tighten jam nut and replace the grub screw when set.

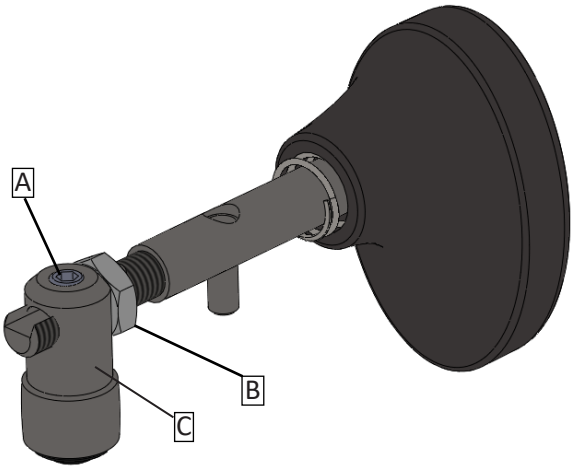

Brick Set

Baffle Brick

The baffle brick is located in the upper part of the stove and this should be removed and cleaned on a regular basis. This prevents any build-up of soot or fly ash that could lead to blocked flue ways and dangerous fume emission. If the baffle brick is removed the chimney/flue way can be swept through the appliance To remove the baffle brick please see below..

Firebricks

In normal use, these can last for many years. It is possible however, to crack them if logs are continually jammed against them or if they are frequently struck with a poker. Check periodically for seriously cracked bricks, which can be replaced with new bricks, available from your dealer or our spares website www.hunterstoves.co.uk/spares.

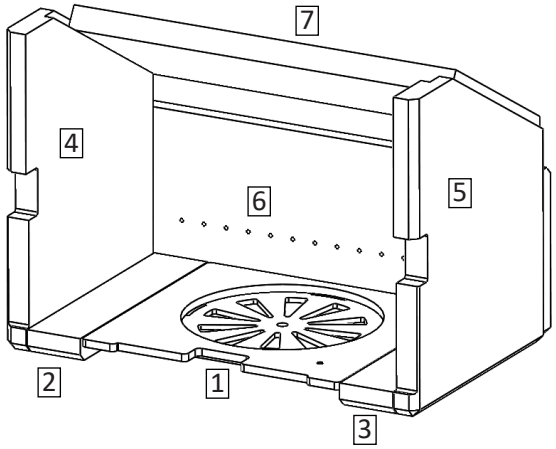

To remove the bricks:	
a)	Lift and remove grate (1) and base bricks (2&3)
b)	Lift baffle brick (7) and pull top of the LH side brick (4), whilst supporting baffle brick
c)	Remove baffle brick (7), rotating to remove from firebox
d)	Pull top of the RH side brick (5) in towards the centre of the firebox and remove.
e)	Pull the top of the rear brick (6) towards you and remove from the firebox.
To replace the bricks work in reverse order as above.	

Stove Body

You can wipe the stove with a cloth. Repair any light damage with Hunter stove paint available through our spares website www.hunterstoves.co.uk/spares.

Chimney and Flue Ways

It is important that the chimney, flue ways and any connecting flue pipe are swept regularly. This should only be carried out by an experienced chimney sweep with a trusted trade rating.

This means at least once a year for smokeless fuels and at least twice a year for wood and other fuels. The brick baffle will need to be removed from the stove in order to sweep the chimney.

If it is not possible to sweep all parts of the chimney through the appliance, ensure there is adequate access to cleaning doors.

If the stove is fitted in place of an open fire, then the chimney should be swept one month after installation to clear any soot falls which may have occurred due to the difference in combustion between the stove and the open fire.

Annual Service

Hunter Stoves Group recommend that this appliance be serviced annually, preferably prior to the start of the heating season, thus avoiding any delay in receiving replacement components, should you need them. If you feel unable to undertake this task, Hunter Stoves recommend that you contact the installation engineer for advice.

Remove all the internal components: Log retainer, bricks, ignition air bar & baffle brick. Clean them with a soft brush carefully and inspect them for damage.

Sweep the chimney/flue system if necessary.

Clean down the internal surfaces of the appliance using a scraper or wire brush. Inspect these surfaces for damage/corrosion. If corrosion or damage is found, we advise that you consult with your installer about rectification/repair.

Brush out or vacuum the inside of the appliance and re-fit the internal components.

Inspect the glass and glass fibretape. Clean the glass with a non-abrasive cleaner if required. If the glass fibretape is torn or damaged, we recommend that is replaced to ensure that no products of combustion enters the room when the appliance is used.

Painted Finish – You can wipe the stove with a cloth. Repair any light damage with Hunter stove paint spray.

Spares

All spare parts can be purchased through our website www.hunterstoves.co.uk/spares

IMPORTANT INFORMATION

IMPORTANT NOTES

General

Before lighting the stove check with the installer that the installation work and commissioning checks described above have been carried out correctly and that the chimney has been swept clean, is sound and free from any obstructions. As part of the stoves' commissioning and handover, the installer should have shown you how to operate the stove correctly.

Carbon Monoxide (CO) Alarms

Hunter Stoves recommend a carbon monoxide (CO) alarm that conforms to BS EN 50291 be installed in the same room as the appliance. See BS EN 50292 and the alarm manufacturer's instructions for installation guidance. The use of such an alarm is not considered a substitute for regular maintenance or servicing of the appliance and flue system.

Air Controls

See how to use Air Controls on page 11.

Fireguards

Always use a fireguard in the presence of children, the elderly or the infirm. The fireguard should be manufactured in accordance with BS8423 – Fireguards for use with solid fuel appliances.

Extractor Fan

Fitting a stove in a room which also contains an extractor fan and/or cooker hood should be avoided where possible. If this is unavoidable, the suitability of the space for fitting this appliance must be decided at the discretion of a qualified installer, and a flue draught interference test must be performed.

Recommended Fuels

Hunter Stoves Group recommend that only wood logs with a moisture content of less than 20% should be burnt on this appliance.

Burning wet or unseasoned wood will create excess smoke emissions, tar deposits in the stove and chimney and will not produce a satisfactory heat output.

WARNING - DO NOT BURN BITUMINOUS COAL, PETRO-COKE, OTHER PETROLEUM BASED FUELS OR TREATED WOOD SUCH AS PALLETS AS THIS WILL INVALIDATE THE PRODUCT WARRANTY. HOUSEHOLD WASTE MUST NOT BE BURNT ON THIS APPLIANCE.

WARNING NOTE

Properly installed and operated, this appliiance will not emit fumes. Occasional fumes from de-ashing and refuelling may occur. Persistent fume emission must not be tolerated.

This appliance should not be operated with the door open.

If fume emission persists, then the following immediate actions should be taken:

- **Open doors and windows to ventilate the room**
- **Let the fire go out or safely remove and dispose of fuel from the appliance**
- **Check for flue/chimney blockages and clean if required**
- **Do not attempt to re-light the fire until the cause of the fume emission has been identified and corrected**

If necessary, seek expert advice.

Aerosols

Do not use an aerosol spray on or near the stove when it is alight.

Operating The Stove

Warning! – This Appliance will be hot when in operation and due care should be taken.

We advise that suitable gloves, or the operating tool is used when operating the air control, and when opening the door.

Ventilation

It is essential that the stove has an adequate air supply for combustion and ventilation. Requirements can be found by checking Building Regulations Approved Document J.
Do not obstruct the ventilation required for the safe use of this appliance.

In The Event Of A Chimney Fire

- Raise the alarm
- Call the Fire Brigade
- Close appliance air controls
- Move furniture, ornaments etc. away
- Place a fireguard in front of stove
- Check the chimney breast for signs of excessive heat.

If the wall is becoming excessively hot, move furniture away.

Ensure the Fire Brigade can gain access to your roof space in order to check for fire spread.

TROUBLESHOOTING

Smoke

This can happen for a variety of reasons e.g cold air trapped in chimney/flue. As cold air is denser, this causes smoke to be forced back down the chimney. We recommend trying to heat the chimney before lighting for example, placing a firelighter on top of the kindling. Ensure wood has a moisture content of less than 20% as this can cause excess smoke. Also check the type of wood as softwood produces a lot more smoke.



Glass

If your glass is blackening this can be due to incorrect use of air controls (see instructions). Alternatively, poor quality fuel which has a high moisture content can also be a cause. When the glass has a white shadow(or crazing) on the inside then this can be caused due to over-firing, too much primary air or a vacuum in the room.

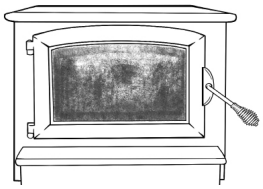

Operation Of Fire

There are varying reasons for problems with your stove however, this could be due to a low or high flue draught in which case you need to speak to your installer. Correct use of the air controls (please refer to instructions). Quality and moisture content of fuel. Check that chimney is not blocked or that nearby buildings or trees affect the wind around it.

Appliance Body

Paint Curing

The stove paint curing process takes place at room temperature and the surface coating is virtually free from fumes and odours. When being put into operation for the first time we would recommend that windows and doors are opened for a short time to provide ventilation.

If the surface of the appliance turns grey or the paint starts to flake or peel then this is caused by over-firing.

Noise

When the appliance body heats up and cools down it may make some clicking noises. This is due to the large temperature differences and is not a problem with the appliance.

Weather Conditions

Varying weather can have an impact on the way the stove burns, especially the wind. An anti-down draught cowl might need to be fitted (speak to a specialist) or a flue damper may also be of help.

Mist and fog may also have an impact on the chimney draught and you will need to change the settings you are using on the stove.

Fire Goes Out After A Short Time

- Check the flue draught of the stove is not too strong or too low.
- Is the air vent blocked?
- Check use of air controls (please refer to these instructions).
- Ensure that the amount of kindling used is enough to light the added fuel.
- Try heating the flue/chimney up first to ensure air pressure is not allowing the flue to operate correctly.

PACKAGING

All our packaging both for our stoves and spares is recyclable. For information detailing where it can be disposed check with your local council.

If any further help is needed then please refer to the Help section on our website - https://www.hunterstoves.co.uk/helpandsupport or contact your dealer.

PRODUCT FICHE - SINGLE DOOR

In accordance with Regulation (EU) 2015/1186

Model	Energy Efficiency Class	Direct Heat Output, [x.x] kW	Indirect Heat Output, [x.x] kW	Energy Efficiency Index, [x]	Useful Energy Efficiency at Nominal Heat Output, [x] %
Herald 4 Eco Single Door	A	4.9	N/A	99	75
Herald 5 Eco Single Door	A	5.0	N/A	103	78
Herald 5 Eco Slimline Single Door	A	4.9	N/A	100	76
Herald 8 Eco Single Door	A	7.0	N/A	99	75
Safety Precautions	Local space heater must be assembled, installed and maintained in accordance with manufacturers instructions.				

Manufacturer Details:

Name:	Hunter Stoves Ltd.
Address:	Trevilla Park, Slaughterbridge, Camelford, Cornwall, England, PL32 9TT
Email:	info@hunterstoves.co.uk
Website:	www.hunterstoves.co.uk

TECHNICAL PARAMETERS - SINGLE DOOR

Technical Parameters for Solid Fuel Local Space Heaters

according to Regulation (EU) 2015/1185

Product Range:	Herald Eco
Indirect heating functionality:	No
Preferred Fuel	Wood logs with moisture content < 20%

Model	Test Report Reference	Nominal Heat Output, P_{nom} [x.x] kW	Useful Efficiency, $\eta_{th,\,nom}$ [x] %	Seasonal Efficiency, η_s [x] %	Space heating emissions at nominal heat output			
					PM	OGC	CO	NO_x
					[x] mg/Nm³ (at 13 % O_2)			
Herald 4 Eco Single Door	300-ELAB-2562-EN	4.9	75	65	32	107	1024	114
Herald 5 Eco Single Door	300-ELAB-2561-EN	5.0	78	68	24	97	1088	111
Herald 5 Eco Slimline Single Door	300-ELAB-2581-EN	4.9	76	66	29	107	1144	99
Herald 8 Eco Single Door	300-ELAB-2616-EN	7.0	75	65	33	112	1173	98

Results are in accordance with EN 13240:2001 + A2:2004 section A.4.7, and EN 16510-1:2018 section A.4.7. Emission of NOx and OGC was determined in accordance with DS/CEN/TS 15883:2009. Emission of PM was determined in accordance with EN 16510-1:2018.

Characteristics when operating with preferred fuel only:

Item	Symbol	Value	Unit
Auxiliary Electricity Consumption			
At nominal heat output	el_{max}	N/A	[x,xxx] kW
At minimum heat output	el_{min}	N/A	[x,xxx] kW
In standby mode	el_{SB}	N/A	[x,xxx] kW
Permanent Pilot Flame Power Requirement			
Pilot flame power requirement (if applicable)	P_{pilot}	N/A	[x,xxx] kW

Type of heat output/room temperature control:	Single stage heat output, no room temperature control
Other control option(s):	N/A

Manufacturer Details:

Name:	Hunter Stoves Ltd.
Address:	Trevilla Park, Slaughterbridge, Camelford, Cornwall, England, PL32 9TT
Email:	info@hunterstoves.co.uk
Website:	www.hunterstoves.co.uk

PRODUCT FICHE - DOUBLE DOOR

In accordance with Regulation (EU) 2015/1186

Model	Energy Efficiency Class	Direct Heat Output, [x.x] kW	Indirect Heat Output, [x.x] kW	Energy Efficiency Index, [x]	Useful Energy Efficiency at Nominal Heat Output, [x] %
Herald 5 Eco Double Door	A	5.0	N/A	103	78
Herald 5 Eco Slimline Double Door	A	4.9	N/A	100	76
Herald 8 Eco Double Door	A	7.0	N/A	99	75
Herald 14 Eco Double Door	A	8.1	N/A	99	75
Safety Precautions	Local space heater must be assembled, installed and maintained in accordance with manufacturers instructions.				

Manufacturer Details:

Name:	Hunter Stoves Ltd.
Address:	Trevilla Park, Slaughterbridge, Camelford, Cornwall, England, PL32 9TT
Email:	info@hunterstoves.co.uk
Website:	www.hunterstoves.co.uk

TECHNICAL PARAMETERS - DOUBLE DOOR

Technical Parameters for Solid Fuel Local Space Heaters

according to Regulation (EU) 2015/1185

Product Range:	Herald Eco
Indirect heating functionality:	No
Preferred Fuel	Wood logs with moisture content < 20%

Model	Test Report Reference	Nominal Heat Output, P_{nom} [x.x] kW	Useful Efficiency, $\eta_{th,\,nom}$ [x] %	Seasonal Efficiency, η_s [x] %	Space heating emissions at nominal heat output			
					PM	OGC	CO	NO_x
					[x] mg/Nm³ (at 13 % O_2)			
Herald 5 Eco Double Door	300-ELAB-2561-EN	5.0	78	68	24	97	1088	111
Herald 5 Eco Slimline Double Door	300-ELAB-2581-EN	4.9	76	66	29	107	1144	99
Herald 8 Eco Double Door	300-ELAB-2616-EN	7.0	75	65	33	112	1173	98
Herald 14 Eco Double Door	300-ELAB-2661-EN	8.1	75	65	32	67	905	98

Results are in accordance with EN 13240:2001 + A2:2004 section A.4.7, and EN 16510-1:2018 section A.4.7. Emission of NOx and OGC was determined in accordance with DS/CEN/TS 15883:2009. Emission of PM was determined in accordance with EN 16510-1:2018.

Characteristics when operating with preferred fuel only:

Item	Symbol	Value	Unit
Auxiliary Electricity Consumption			
At nominal heat output	el_{max}	N/A	[x,xxx] kW
At minimum heat output	el_{min}	N/A	[x,xxx] kW
In standby mode	el_{SB}	N/A	[x,xxx] kW
Permanent Pilot Flame Power Requirement			
Pilot flame power requirement (if applicable)	P_{pilot}	N/A	[x,xxx] kW

Type of heat output/room temperature control:	Single stage heat output, no room temperature control
Other control option(s):	N/A

Manufacturer Details:

Name:	Hunter Stoves Ltd.
Address:	Trevilla Park, Slaughterbridge, Camelford, Cornwall, England, PL32 9TT
Email:	info@hunterstoves.co.uk
Website:	www.hunterstoves.co.uk

WARRANTY

Hunter Stoves Ltd. Extended 5 and 10 Year Warranty

2 Year Standard Warranty

Any appliance bought through the showroom of an authorised Hunter Stoves Group dealership will automatically be covered by our standard 2-year conditional guarantee.

However, this standard 2-year warranty can be extended to a 5-year or 10-year conditional warranty dependent on the model type (5 years - Boiler model and Gas models, 10 year - Room heater).

To qualify for this extended warranty option, you need to:

1. Register your purchase online at https://www.hunterstoves.co.uk/ProductRegistration
2. Retain your proof of purchase.

Warranty Conditions

For the Standard 2 year or extended 5/10-year warranty to be valid and to remain in force throughout the warranty period the following must have been carried out:

1. The appliance must have been installed by an appropriately qualified engineer (from the Competent Person Scheme/Gas Safe) in accordance with the manufacturer's instructions and in compliance of any relevant national or local building regulations. Please visit the following links for details on the Competent Person Scheme: https://www.gov.uk/guidance/competent-person-scheme-current-schemes-and-how-schemes-are-authorised and Gas Safe register: https://www.gassaferegister.co.uk/
2. The appliance will need to be registered within two months of purchase and the commissioning and installation documentation completed (these need to be kept by the end user).
3. The appliance must be serviced within 12 months of the installation date for the second year of the standard warranty to be valid, and within every 12-month anniversary thereafter to maintain the validity and coverage of any extended warranty. For this purpose, the installation and user instructions, supplied with the appliance, makes a provision for receipts and annual services to be recorded. This is needed in the event of a claim during the warranty period.
4. Only genuine Hunter Stoves spare parts or consumables can be used in the servicing and maintenance of the appliance during any standard or extended warranty period. These can be sourced from your authorised supplier directly or through our website spares portal. www.hunterstoves.co.uk/spares.
5. Any problems or issues giving rise to any claim under the standard or extended warranty must be submitted to the authorised Hunter Stoves Group retailer from whom you originally purchased the appliance. Hunter Stoves Group will then offer appropriate support and help through your original authorised supplier to solve any issues.
6. The standard or extended warranty option is not transferable. It is solely for the benefit of the original purchaser of the appliance. For this purpose, please retain the proof of purchase.

Warranty Exclusions

For Solid Fuel Stoves:

- Glass and rope/ceramic seals
- Fire bricks
- Baffles/Throat Plates
- Log retainers, grate supports and catch bars
- Grate parts
- Ashpans
- Clip-in Boilers

For Gas Stoves:

- Gas pilot assemblies
- Thermocouples and Oxy pilots
- Ceramic log and coal 'fuel-effects'
- Batteries

Paint and Surface Coverings

The paint or surface covering of the appliance will be covered (for 2 years after installation) provided the warranty conditions are met. However, damage due to the following events will not be covered:

1. Damage to the paint surface caused by the appliance being stored in a damp and cold environment is not covered under warranty. Please be aware that any moisture within the room where the stove is installed e.g. through clothes drying, can be a cause of paint issues.

2. In the course of the initial firings of the appliance the paint or enamel surface may change colour. This is normal and as such is therefore not covered under warranty.

3. Damaged caused by over firing, resulting in cracking, bubbling or discolouration to the paint or enameled surface finish is not covered under warranty.

Warranty Limitations

1. Damage to the appliance due to specific local conditions caused by draft or chimney defects.

2. Damage resulting from installation and use where installation is not in accordance with the manufacturer's instructions or local building and/or safety regulations.

3. Damage or premature wear caused by burning inappropriate fuels such as Bituminous coal, "Petro-Coke" or any other Petroleum based coals. Please visit the HETAS website, www.hetas.co.uk, for a full list of approved fuels which are covered by the warranty. Fuels outside of this list are not covered by the warranty.

4. Damage caused by burning material with high creosote content or any other painted/treated timber.

5. Consequential loss to associated non-Hunter Stoves Group products is not covered under the warranty.

6. Consequential loss relating to decorations, soft furnishings or other household assets is not covered under the warranty.

7. Cost associated with the removal and re-installation of an appliance subject to a warranty claim.

Hunter Stoves Group total liability will only extend to the total purchase price paid for the goods in any warranty claim. Hunter Stoves Group reserve the right to replace, repair or refund to value of goods purchased.

ANY HUNTERS STOVES GROUP PRODUCT PURCHASED VIA AN INTERNET SUPPLIER, OR THROUGH AN UNAUTHORISED STOCKIST WILL ONLY BE SUPPORTED BY THE STATUTORY, 12 MONTH GUARANTEE AND WILL NOT QUALIFY FOR ANY EXTENDED 5 OR 10 YEAR WARRANTY.

The Hunter Stoves Group extended warranty option does not affect your statutory rights.

This revised standard or extended 5 or 10-year warranty option comes into effect on 1st September 2015 and will apply to all appliances sold from that date.

This standard/extended warranty applies to purchases of Hunter Stoves within the United Kingdom and the Republic of Ireland. Purchases in all other countries are subject to the warranty conditions specified by the distributer in those markets.

hunterstoves
GROUP

Hunter Stoves Ltd, 8 Emperor Way, Exeter Business Park, Exeter, Devon, EX1 3QS

www.hunterstoves.co.uk Email: info@hunterstoves.co.uk

BRITISH
EXCELLENCE

hunterstoves
GROUP

8 EMPEROR WAY EXETER DEVON EX1 3QS
INFO@HUNTERSTOVES.CO.UK WWW.HUNTERSTOVES.CO.UK

Hunter Stoves reserve the right to change dimensions and procedures described in these instructions at anytime without special notice.

Registered address: Hunter Stoves Ltd., Trevilla Park, Slaughterbridge, Camelford, Cornwall, UK, PL32 9TT